CANAAN
site furnishings

Model No : CAT-200

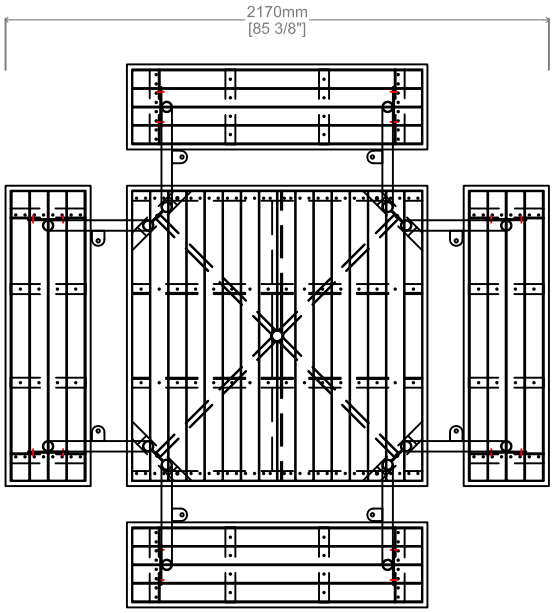

Top View

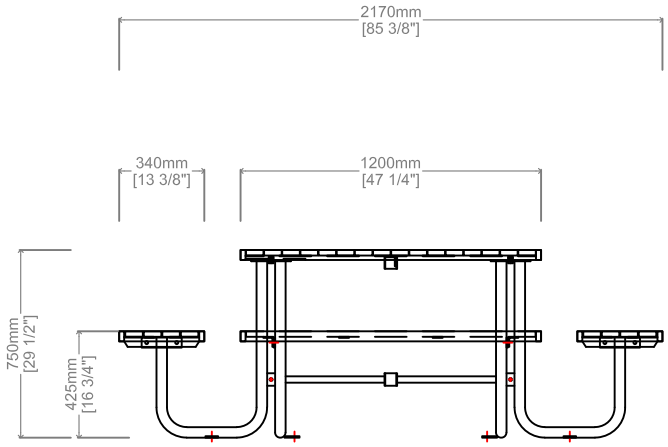

Side View

Total Length: 85 3/8” / 2170 mm Weight: 264.6 lbs. / 120 kg
Table Length: 47 1/4” / 1200 mm Table Height: 29 1/2” / 750 mm
Seat Length: 47 1/4” / 1200 mm Seat Width: 13 3/8” / 340mm Seat Height: 16 3/4” / 425 mm

Materials:

Constructed with Recycled Plastic Lumber and framed with galvanized steel.

Finish:

Steel components are electrocoated with anti-corrosion treatment and fnished with UV resistant Canaan 5 Steps Powder Coating electrostatically.

Installation:

Surface mounted: holes are pre-drilled on each foot for securing to base.

Options:

- ☑ Recycled Plastic Lumber options
- ☑ Wood-Plastic Composite options
- ☑ Wheelchair accessibility
- ☑ Backrest
- ☑ Powdercoat color
- ☑ Umbrella

Propritary and confidential

All the information condained in this drawing is the property of Canaan Inc. Reproduction of the drawing in whole or in part is prohibited without the written consent of Canaan Inc.
Copyright © 2016 Canaan Inc. All rights reserved.

Unless otherwise specified

All measurements are in mm; all measurements are also preliminary and may vary from final plans.We reserve the right to improve, alter or discontinue specifications without notice.

TF: 1-877-305-6638
Fax: 1-866-806-2355
Email: info@canaansf.com
www.canaansitefurnishings.com